MinimaDecor

Minimalist Home Furniture

by OCASSO

MERAN HOLDING

A stylish design
for your furniture needs!

We carry out production and R&D operations in our factory of 80,000 m² making use of the world's newest technologies.

Always ahead thanks to our technologies!

Our manufacturing site is equipped with the production machineries, robots and production lines with superior German technology from Homag, and the painting line from Venjakob.

MinimaDecor
Minimalist Home Furniture
by OCASSO

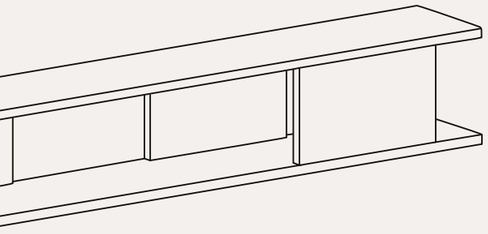

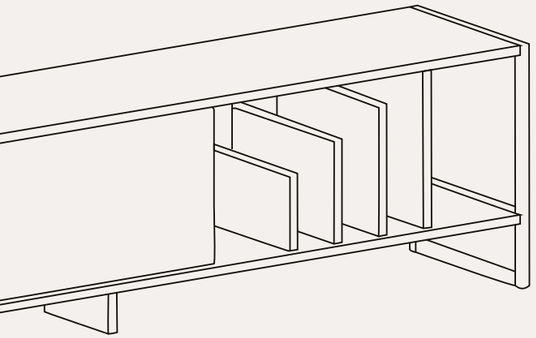

INNOVATION WITH EXPERT STAFF!

The processes starting with R&D turn into products through expert staff. Our manufacturing site is the most innovative and modern furniture factory in Europe at international quality, design and manufacturing standards.

WE OFFER OUR DESIGNS TO THE WORLD.

Our operations are beyond the country's borders with exports to 8 countries in 3 continents. Taking advantage of exporting worldwide, we interact with many different cultures and reflect the inspiration we gain from them to our designs. We feed our creativity taking different characteristics from each culture into our organization.

USA Office & Warehouse

Deliveries in the USA from a warehouse of 30,000 m².

UK Office & Warehouse

Deliveries in Europe and the UK from a warehouse of 15,000 m2.

WE DESIGN MINIMALISM WITH QUALITY

- **Connection System:** The parts of the products are connected by the minifix connection system.

- **Packaging System:** We package the products making use of filling materials at international standards to ensure they are delivered with no damage during transport. First Class double corrugated cardboards and honeycomb cardboards are used for the packaging.

- **Installation & Mounting:** The products are shipped demounted. All the parts are numbered with a numbering method that makes it easy to mount the product. The package contains a detailed installation diagram, all types of apparatuses and connectors needed for the mounting and installation.

- **Materials Used:** Our products are manufactured from First Class 18 mm particle boards / melamine coated chipboard at European E1 quality standards. Backrests are made of 6mm MDF.

- **Accessories Used:** The accessories used in the products are First Class at European Standards. First Class slow motion hinges are used on the furniture doors. First Class PVC 0.8 tapes are used for all the parts of the products.

MinimaDecor Products

2 YEARS WARRANTY

Channel Backrest

Easy to install without nails and no deformation in the products thanks to the channel backrest system.

Flap Stay

A holding arm on this flap stay mechanism makes the furniture doors to function systematically.

Laser Cut

These elegant lines are burnt with laser and painted. You will know that they are perfect.

Slow Motion Hinges

Slow motion hinges ensure slow and silent closure of furniture doors. You will feel peaceful and valuable every time you touch the furniture doors.

Easy to Install

You are given a detailed and specific mounting instructions to easily install the products. All the parts are numbered and, and each mounting step is listed.

Extra Durability

No deformation and shaking thanks to scratch & impact resistant melamine coated chipboards, and perfectly calculated joints and legs.

Storage Capacity

A neat appearance with a wide storage and well-thought dimensions. This is ideal for you if you need a products that would bring a relaxation to your home.

Metal Legs

We bring the durability and modern design to the highest level with the quality metal legs complementing the look.

Wooden Legs

With these carefully processed wooden legs, you will have a modern and elegant look in your home.

Sliding Doors

These smartly designed sliding doors function perfectly every time, and cause no obstacle when they are open. Offer a spacious area to use.

WHY MINIMADECOR?

CONTENTS

10-43 / LEROY COLLECTION

44-85 / NICE COLLECTION

86-91 / DORA COLLECTION

92-99 / GRADO COLLECTION

100-123 / JAMES COLLECTION

124-143 / PARSON COLLECTION

144-151 / PIRAMIDE COLLECTION

152-169 / PRUGIA COLLECTION

170-177 / REETA COLLECTION

178-185 / ROME COLLECTION

186-193 / TORINO COLLECTION

194-201 / VENEZIA COLLECTION

CONTENTS

202-273 / TV STANDS

274-285 / BOOKCASES

286-303 / WALL SHELVES

304-309 / COFFEE TABLES

310-325 / SIDE TABLES

326-335 / MULTIPURPOSE CABINETS

336-341 / COMPUTER DESKS

342-347 / SIDEBOARDS

348-353 / NIGHTSTANDS

354-363 / HANGER, COATRACK & SHOE CABINETS

364-389 / BATHROOM VANITIES

LEROY
COLLECTION

LEROY

tv stand

LER60TS01

Color | Anthracite

w	*153*	*d*	*35*	*h*	*50*	*cm*
w	*60*	*d*	*13,8*	*h*	*19,8*	*inch*

Max Weight Carried 70 kg | 150 lbs

wall panel - floating tv stand

LERWP5201 | Color | Anthracite

w	*134*	*d*		*h*	*100*	*cm*	Max Weight Carried 50 kg | 110 lbs
w	*52*	*d*		*h*	*39*	*inch*	

LER60FTS01 | Color | Anthracite

w	*150*	*d*	*35*	*h*	*30*	*cm*	Max Weight Carried 60 kg | 130 lbs
w	*60*	*d*	*13,8*	*h*	*12*	*inch*	

LEROY

floating tv stand

LER52FTS01

Color | Anthracite

w	*134*	*d*	*35*	*h*	*30*	*cm*
w	*52*	*d*	*13,8*	*h*	*12*	*inch*

Max Weight Carried 50 kg | 110 lbs

horizontal bookcase

LER52HB01

Color | Anthracite

w	*135*	***d***	*25*	***h***	*30*	*cm*
w	*53*	***d***	*10*	***h***	*12*	*inch*

Max Weight Carried 60 kg | 130 lbs

vertical bookcase

LER35VB01

Color | Anthracite

w	*32*	*d*	*25*	*h*	*90*	*cm*
w	*12,6*	*d*	*9,8*	*h*	*35*	*inch*

Max Weight Carried 15 kg | 30 lbs

tv stand

LER35TS01

Color | Anthracite

w	*90*	***d***	*35*	***h***	*52*	*cm*
w	*35,4*	***d***	*13,8*	***h***	*20,4*	*inch*

Max Weight Carried 60 kg | 130 lbs

dining table

LER63DT01

Color | Anthracite

LER63DT02

Color | Yunus

w	*160*	*d*	*90*	*h*	*75*	*cm*
w	*63*	*d*	*35*	*h*	*29,5*	*inch*

bench

LER51BNC01

Color | Cream

LER51BNC02

Color | Grey

w	*130*	*d*	*40*	*h*	*48*	*cm*
w	*51*	*d*	*16*	*h*	*19*	*inch*

chair

LERCH01

Color | Cream

LERCH02

Color | Grey

w	*45*	*d*	*40*	*h*	*83*	*cm*
w	*18*	*d*	*16*	*h*	*33*	*inch*

LEROY

mirror - sideboard

LER44MIR01 | Color | Anthracite

w	*50/35*	*d*	*35*	*h*	*50/35*	*cm*
w	*20/13,8*	*d*	*13,8*	*h*	*20/13,8*	*inch*

LER60SB01 | Color | Anthracite

w	*153*	*d*	*40*	*h*	*74*	*cm*
w	*60*	*d*	*15,7*	*h*	*29*	*inch*

coffee table

LER40CT01

Color | Anthracite

w	*100*	*d*	*60*	*h*	*40*	*cm*
w	*39,4*	*d*	*23,6*	*h*	*16*	*inch*

Max Weight Carried 40 kg | 90 lbs

coffee table

LER30CT01

Color | Anthracite

w	*75*	*d*	*75*	*h*	*40*	*cm*
w	*29,5*	*d*	*29,5*	*h*	*16*	*inch*

Max Weight Carried 40 kg | 90 lbs

side table

LER18ST01

Color | Anthracite

w	*45*	*d*	*45*	*h*	*60*	*cm*
w	*17,7*	*d*	*17,7*	*h*	*64,6*	*inch*

Max Weight Carried 30 kg | 66 lbs

bookcase

LER73BC01

Color | Anthracite

w	*60*	*d*	*27*	*h*	*185*	*cm*
w	*23,6*	*d*	*10*	*h*	*73*	*inch*

Max Weight Carried 15 kg | 30 lbs

corner bookcase

LER65CBC01

Color | Anthracite

w	*44*	*d*	*34*	*h*	*164*	*cm*
w	*17,3*	*d*	*13,4*	*h*	*64,6*	*inch*

Max Weight Carried 15 kg | 30 lbs

computer desk

LER47CD01

Color | Anthracite

w	*120*	*d*	*60*	*h*	*95*	*cm*
w	*47,2*	*d*	*23,6*	*h*	*37,7*	*inch*

Max Weight Carried 70 kg | 150 lbs

NICE
COLLECTION

tv stand

NIC71TS01

Color | Pomza

w	*180*	*d*	*30*	*h*	*48*	*cm*
w	*71*	*d*	*12*	*h*	*19*	*inch*

Max Weight Carried 60 kg | 130 lbs

tv stand

NIC60TS01 | Color | Pomza

w	*150*	*d*	*30*	*h*	*48*	*cm*
w	*60*	*d*	*12*	*h*	*19*	*inch*

Max Weight Carried 50 kg | 110 lbs

floating tv stand

NIC71FTS01 | Color | Pomza

w	*180*	*d*	*30*	*h*	*30*	*cm*
w	*71*	*d*	*12*	*h*	*12*	*inch*

Max Weight Carried | 15 kg | 30 lbs

vertical/horizontal bookcase

NIC60VHB01 | Color | Pomza

w	*147*	***d***	*15*	***h***	*80*	*cm*
w	*58,1*	***d***	*6*	***h***	*31,5*	*inch*

Max Weight Carried 10 kg | 20 lbs

extendable dining table

NIC63DT01 — Color | Pomza

w	*160*	*d*	*90*	*h*	*75*	*cm*	Max Weight Carried	10 kg	20 lbs
w	*78,7*	*d*	*35,4*	*h*	*29,5*	*inch*			

NIC79EDT01 — Color | Pomza

w	*200*	*d*	*90*	*h*	*75*	*cm*	Max Weight Carried	10 kg	20 lbs
w	*78,7*	*d*	*35,4*	*h*	*29,5*	*inch*			

bench

LER51BNC01

Color | Cream

LER51BNC02

Color | Grey

w	*130*	*d*	*40*	*h*	*48*	*cm*
w	*51*	*d*	*16*	*h*	*19*	*inch*

chair

LERCH01

Color | Cream

LERCH02

Color | Grey

w	*45*	*d*	*40*	*h*	*83*	*cm*
w	*18*	*d*	*16*	*h*	*33*	*inch*

sideboard

NIC71SB01

Color | Pomza

w	*180*	*d*	*30*	*h*	*78*	*cm*
w	*71*	*d*	*12*	*h*	*30,7*	*inch*

Max Weight Carried 15 kg | 30 lbs

sideboard

NIC47SB01 | Color | Pomza

w	*120*	*d*	*30*	*h*	*78*	*cm*
w	*47,2*	*d*	*12*	*h*	*30,7*	*inch*

Max Weight Carried 15 kg | 30 lbs

sideboard

NIC47SSB01

Color | Pomza

w	*120*	*d*	*42*	*h*	*78*	*cm*
w	*47,2*	*d*	*16,5*	*h*	*30,7*	*inch*

Max Weight Carried 15 kg | 30 lbs

coffee table

NIC35CT01

Color | Pomza

w	*90*	*d*	*60*	*h*	*40*	*cm*
w	*35,4*	*d*	*23,6*	*h*	*7,9*	*inch*

Max Weight Carried 30 kg | 66 lbs

bookcase

NIC71BC01 | Color | Pomza

w	*60*	*d*	*30*	*h*	*180*	*cm*
w	*24*	*d*	*12*	*h*	*71*	*inch*

Max Weight Carried | 15 kg | 30 lbs

bedstead

NIC160X200BS01 | Color | Pomza

w	175	*d*	200	*h*	112	*cm*
w	69	*d*	78,7	*h*	44	*inch*

nightstand

NIC22NS01

Color | Pomza

w	*40*	*d*	*50*	*h*	*55*	*cm*
w	*15,7*	*d*	*20*	*h*	*21,5*	*inch*

Max Weight Carried 30 kg | 60 lbs

mirror - chest of drawers

NIC20MIR01 — Color | Pomza

w	*80*	*d*	*1*	*h*	*50*	*cm*
w	*31,5*	*d*		*h*	*19,5*	*inch*

NIC34COD01 — Color | Pomza

w	*90*	*d*	*42*	*h*	*85*	*cm*
w	*35,4*	*d*	*16,5*	*h*	*33,5*	*inch*

Max Weight Carried 30 kg | 66 lbs

chest of drawers

NIC46COD01 | Color | Pomza

w	*60*	*d*	*40*	*h*	*118*	*cm*
w	*23,6*	*d*	*15,7*	*h*	*46,4*	*inch*

Max Weight Carried 30 kg | 66 lbs

wardrobe - corner

NIC75WRD001 Color | Pomza

w	*88*	*d*	*88*	*h*	*190*	*cm*
w	*34,5*	*d*	*34,5*	*h*	*75*	*inch*

NIC83WRD001 Color | Pomza

w	*88*	*d*	*88*	*h*	*210*	*cm*
w	*34,5*	*d*	*34,5*	*h*	*84*	*inch*

wardrobe - 1 door

NIC75WRD101 Color | Pomza

w	*45*	*d*	*54*	*h*	*190*	*cm*
w	*17,7*	*d*	*21,3*	*h*	*75*	*inch*

NIC83WRD101 Color | Pomza

w	*45*	*d*	*54*	*h*	*210*	*cm*
w	*17,7*	*d*	*21,3*	*h*	*84*	*inch*

wardrobe - 2 doors

NIC75WRD201 Color | Pomza

w	*90*	*d*	*54*	*h*	*190*	*cm*
w	*35,4*	*d*	*21,3*	*h*	*75*	*inch*

NIC83WRD201 Color | Pomza

w	*90*	*d*	*54*	*h*	*210*	*cm*
w	*35,4*	*d*	*21,3*	*h*	*84*	*inch*

wardrobe - 3 doors

NIC75WRD301 — Color | Pomza

w	*135*	*d*	*54*	*h*	*190*	*cm*	Max Weight Carried	kg	lbs
w	*53*	*d*	*21,3*	*h*	*75*	*inch*			

NIC83WRD301 — Color | Pomza

w	*135*	*d*	*54*	*h*	*210*	*cm*	Max Weight Carried	kg	lbs
w	*53*	*d*	*21,3*	*h*	*84*	*inch*			

DORA
COLLECTION

tv stand

DOR59TS01

Color | Oak

w	*150*	***d***	*30*	***h***	*40*	*cm*
w	*59*	***d***	*10*	***h***	*15,7*	*inch*

Max Weight Carried 90 kg | 200 lbs

DORA

sideboard

DOR71SB01

Color | Oak

w	*180*	*d*	*43*	*h*	*74*	*cm*
w	*71*	*d*	*16,9*	*h*	*29*	*inch*

Max Weight Carried 80 kg | 180 lbs

GRADO
COLLECTION

tv stand

GRA57TS01

Color | High gloss white + Walnut

w	*145*	***d***	*35*	***h***	*56*	*cm*
w	*57*	***d***	*14*	***h***	*22*	*inch*

Max Weight Carried 90 kg | 200 lbs

coffee table

GRA35CT01
Color | High gloss white + Walnut

GRA35CT02
Color | Anthracite + Alize

GRA35CT03
Color | Grey + Alize

w	*89*	*d*	*89*	*h*	*46*	*cm*	
w	*35*	*d*	*35*	*h*	*18,1*	*inch*	

Max Weight Carried 55 kg | 120 lbs

side table

GRA20ST01

Color | High gloss white + Walnut

GRA20ST02

Color | High gloss white

w	*50*	*d*	*50*	*h*	*60*	*cm*
w	*19,6*	*d*	*19,6*	*h*	*23,6*	*inch*

Max Weight Carried 40 kg | 90 lbs

JAMES
COLLECTION

tv stand

JMS59TS01 | Color | Moonstone + Black

w	*148 / 150*	***d***	*35 / 20*	***h***	*45 / 18*	*cm*	Max Weight Carried	80 kg | 180 lbs
w	*59 / 58*	***d***	*8 / 13,5*	***h***	*18 /. 7*	*inch*		

tv stand

JMS59TS02

Color | Sepet + Black

w	*148 / 150*	***d***	*35 / 20*	***h***	*45 / 18*	*cm*
w	*59 / 58*	***d***	*8 / 13,5*	***h***	*18 /. 7*	*inch*

Max Weight Carried 80 kg | 180 lbs

tv stand

JMS59TS03 | Color | Sonomo + Black

w	*148 / 150*	***d***	*35 / 20*	***h***	*45 / 18*	*cm*	Max Weight Carried	80 kg | 180 lbs
w	*59 / 58*	***d***	*8 / 13,5*	***h***	*18 /. 7*	*inch*		

coffee table

JMS35CT01

Color | Moonstone + Black

JMS35CT02

Color | Sepet + Black

JMS35CT03

Color | Sonomo + Black

w	*88*	*d*	*60*	*h*	*45*	*cm*
w	*34,5*	*d*	*23*	*h*	*18*	*inch*

Max Weight Carried 45 kg | 90 lbs

side table

JMS40ST01

Color | Moonstone + Black

JMS40ST02

Color | Sepet + Black

JMS40ST03

Color | Sonomo + Black

w	*40*	*d*	*30*	*h*	*50*	*cm*
w	*15,5*	*d*	*12*	*h*	*19,5*	*inch*

Max Weight Carried 20 kg | 45 lbs

night stand

JMS18NS01

Color | Moonstone + Black

JMS18NS02

Color | Sepet + Black

JMS18NS03

Color | Sonomo + Black

w	*140*	*d*	*40*	*h*	*50*	*cm*
w	*55*	*d*	*15,7*	*h*	*19,7*	*inch*

Max Weight Carried 55 kg | 120 lbs

JAMES

bookcase

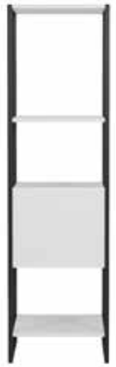

JMS18BC01

Color | Moonstone + Black

JMS18BC02

Color | Sepet + Black

JMS18BC03

Color | Sonomo + Black

w	*45*	*d*	*35*	*h*	*160*	*cm*
w	*17,5*	*d*	*13,5*	*h*	*63*	*inch*

Max Weight Carried 15 kg | 33 lbs

bookcase

JMS23BCLD01

Color | Moonstone + Black

JMS23BCLD02

Color | Sepet + Black

JMS23BCLD03

Color | Sonomo + Black

w	*60*	*d*	*20*	*h*	*148*	*cm*	
w	*23*	*d*	*8*	*h*	*58*	*inch*	

Max Weight Carried 15 kg | 33 lbs

bookcase

JMS23BCLN01

Color | Moonstone + Black

JMS23BCLN02

Color | Sepet + Black

JMS23BCLN03

Color | Sonomo + Black

w	*60*	*d*	*35*	*h*	*192*	*cm*	
w	*23*	*d*	*13,5*	*h*	*75,5*	*inch*	

Max Weight Carried 10 kg | 22 lbs

bookcase

JMS34BC01

Color | Moonstone + Black

JMS34BC02

Color | Sepet + Black

JMS34BC03

Color | Sonomo + Black

w	*85*	*d*	*35*	*h*	*180*	*cm*
w	*33,5*	*d*	*13,5*	*h*	*71*	*inch*

Max Weight Carried 15 kg | 33 lbs

coatrack

JMS36CR01

Color | Moonstone

JMS36CR02

Color | Sepet

JMS36CR03

Color | Sonomo + Black

w	*90*	*d*	*35*	*h*	*182*	*cm*
w	*35,5*	*d*	*13,5*	*h*	*71,5*	*inch*

Max Weight Carried 10 kg | 20 lbs

PARSON
COLLECTION

tv stand

PRS53TS01

Color | Moonstone + Rahle

PRS53TS02

Color | Anthracite + Rahle

w	*135*	*d*	*35*	*h*	*48*	*cm*
w	*53*	*d*	*13,5*	*h*	*19*	*inch*

Max Weight Carried 80 kg | 180 lbs

tv stand

PRS36TS01

Color | Moonstone + Rahle

PRS36TS02

Color | Anthracite + Rahle

w	*90*	*d*	*35*	*h*	*48*	*cm*
w	*35,5*	*d*	*13,5*	*h*	*19*	*inch*

Max Weight Carried 50 kg | 110 lbs

coffee table

PRS41CT01

Color | Moonstone + Rahle

PRS41CT02

Color | Anthracite + Rahle

w	*105*	*d*	*60*	*h*	*46*	*cm*	
w	*41*	*d*	*23*	*h*	*18*	*inch*	

Max Weight Carried 30 kg | 66 lbs

side table

PRS20ST01

Color | Moonstone + Rahle

PRS20ST02

Color | Anthracite + Rahle

w	*36 / 50*	*d*	*35 / 40*	*h*	*48 / 52*	*cm*	Max Weight Carried	20 kg | 44 lbs
w	*14 / 19,5*	*d*	*13,5 / 15,5*	*h*	*19/ 20*	*inch*		

dresser

PRS32DR01

Color | Moonstone + Rahle

PRS32DR02

Color | Anthracite + Rahle

w	*82*	*d*	*35*	*h*	*68*	*cm*
w	*32*	*d*	*13,5*	*h*	*26,5*	*inch*

Max Weight Carried 50 kg | 110 lbs

dresser

PRS35DR01

Color | Moonstone + Rahle

PRS35DR02

Color | Anthracite + Rahle

w	*90*	*d*	*35*	*h*	*75*	*cm*
w	*32*	*d*	*13,5*	*h*	*29,5*	*inch*

Max Weight Carried 50 kg | 110 lbs

multipurpose cabinet

PRS36MPC01

Color | Moonstone + Rahle

PRS36MPC02

Color | Anthracite + Rahle

w	*82*	*d*	*35*	*h*	*48*	*cm*
w	*36*	*d*	*13,5*	*h*	*19*	*inch*

Max Weight Carried 50 kg | 110 lbs

fireplace cabinet

PRS30FCB01

Color | Moonstone + Rahle

PRS30FCB02

Color | Anthracite + Rahle

w	*75*	*d*	*27*	*h*	*83*	*cm*
w	*29,5*	*d*	*10,5*	*h*	*32,5*	*inch*

Max Weight Carried 30 kg | 66 lbs

coatrack

PRS39CR01

Color | Moonstone + Rahle

PRS39CR02

Color | Anthracite + Rahle

w	*100 / 100*	*d*	*35*	*h*	*38 / 42*	*cm*	Max Weight Carried	15 kg | 33 lbs
w	*39 / 39*	*d*	*13,5*	*h*	*15 / 16,5*	*inch*		

PIRAMIDE
COLLECTION

tv stand

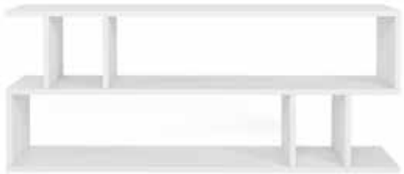

PRA47TS01

Color | High gloss white

PRA47TS02

Color | Anthracite + Walnut

w	*120*	***d***	*35*	***h***	*50*	*cm*
w	*47,2*	***d***	*13,8*	***h***	*19,6*	*inch*

Max Weight Carried 70 kg | 150 lbs

bookcase

PRA24BC01

Color | High gloss white

PRA24BC02

Color | Anthracite + Walnut

w	*60*	*d*	*22*	*h*	*160*	*cm*
w	*23,6*	*d*	*8,7*	*h*	*63*	*inch*

Max Weight Carried 15 kg | 33 lbs

bookcase

PRA35BC01

Color | High gloss white

PRA35BC02

Color | Anthracite + Walnut

w	*90*	*d*	*22*	*h*	*160*	*cm*
w	*35,4*	*d*	*8,7*	*h*	*63*	*inch*

Max Weight Carried 15 kg | 33 lbs

PRUGIA
COLLECTION

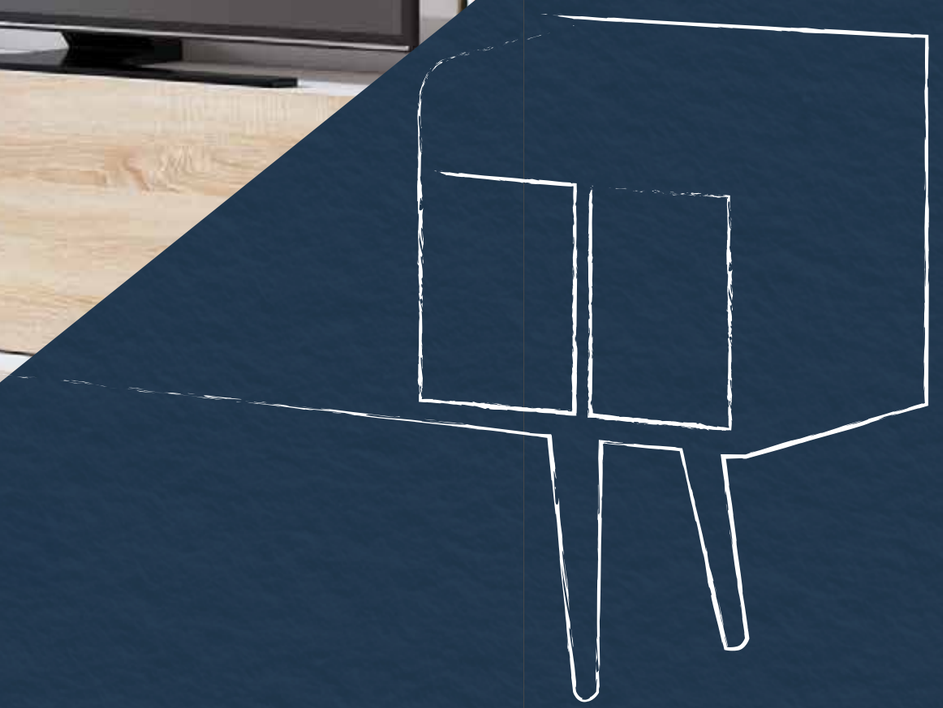

tv stand

PRU63TS01

Color | High gloss white + Sonomo

PRU63TS02

Color | Anthracite + Walnut

w	*160*	*d*	*35*	*h*	*60*	*cm*
w	*63*	*d*	*14*	*h*	*23,5*	*inch*

Max Weight Carried 60 kg | 132 lbs

sideboard

PRU47CS01

Color | High gloss white + Sonomo

PRU47CS02

Color | Anthracite + Rahle

w	*120*	*d*	*40*	*h*	*88*	*cm*
w	*47*	*d*	*15*	*h*	*33*	*inch*

Max Weight Carried 40 kg | 88 lbs

dresser

PRU35DR01

Color | High gloss white + Sonomo

PRU35DR02

Color | Anthracite + Rahle

w	*50*	*d*	*32*	*h*	*58*	*cm*
w	*19*	*d*	*12*	*h*	*22,5*	*inch*

Max Weight Carried 20 kg | 45 lbs

nightstand

PRU58CMD01

Color | High gloss white + Sonomo

PRU58CMD02

Color | Anthracite + Rahle

w	*50*	*d*	*32*	*h*	*58*	*cm*
w	*19*	*d*	*12*	*h*	*22,5*	*inch*

Max Weight Carried 20 kg | 45 lbs

coffee table

PRU35CT01

Color | High gloss white + Sonomo

PRU35CT02

Color | Anthracite + Walnut

w	*90*	*d*	*90*	*h*	*46*	*cm*
w	*35*	*d*	*35*	*h*	*18*	*inch*

Max Weight Carried 55 kg | 120 lbs

bookcase

PRU39BC01

Color | High gloss white + Sonomo

PRU39BC02

Color | Anthracite + Walnut

w	*65*	*d*	*28*	*h*	*126*	*cm*	
w	*25*	*d*	*11*	*h*	*49*	*inch*	

Max Weight Carried 15 kg | 33 lbs

bookcase

PRU52BC01

Color | High gloss white + Sonomo

PRU52BC02

Color | Anthracite + Rahle

w	*65*	*d*	*28*	*h*	*148*	*cm*
w	*25,5*	*d*	*11*	*h*	*62*	*inch*

Max Weight Carried 15 kg | 33 lbs

computer desk

PRU47CD01

Color | High gloss white + Sonomo

PRU47CD02

Color | Anthracite + Rahle

w	*120*	*d*	*50*	*h*	*85*	*cm*	
w	*47*	*d*	*19,5*	*h*	*33*	*inch*	

Max Weight Carried 50 kg | 132 lbs

RETA
COLLECTION

tv stand

REE64TS01

Color | High gloss white

w	*162*	***d***	*38*	***h***	*40*	*cm*
w	*63,8*	***d***	*15*	***h***	*15,4*	*inch*

Max Weight Carried 70 kg | 150 lbs

coffee table

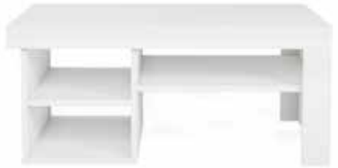

REE36CT01

Color | High gloss white

w	*90*	*d*	*64*	*h*	*40*	*cm*
w	*35,4*	*d*	*13,4*	*h*	*15,7*	*inch*

Max Weight Carried 50 kg | 110 lbs

bookcase

REE63BC01

Color

High gloss white

REE63BC02

Color

High gloss white + Walnut

REE63BC03

Color

High gloss white + Walnut

REE63BC04

Color

High gloss white + Marble pattern

REE63BC05

Color

Marble pattern + High gloss white

w	*45*	*d*	*25*	*h*	*160*	*cm*
w	*17,7*	*d*	*9,8*	*h*	*63*	*inch*

Max Weight Carried 15 kg | 33 lbs

ROME
COLLECTION

tv stand

ROM59TS01

Color | High gloss white

ROM59TS02

Color | High gloss white + Sonomo

w	*150*	***d***	*35*	***h***	*45*	*cm*
w	*59,1*	***d***	*13,8*	***h***	*17,7*	*inch*

Max Weight Carried 70 kg | 155 lbs

ROME

TV STAND

coffee table

ROM35CT01

Color | High gloss white

ROM35CT02

Color | High gloss white + Sonomo

w	*90*	*d*	*60*	*h*	*40*	*cm*
w	*35,4*	*d*	*23,6*	*h*	*15,7*	*inch*

Max Weight Carried 40 kg | 90 lbs

side table

ROM16ST01

Color | High gloss white

ROM16ST02

Color | High gloss white + Sonomo

w	*40*	***d***	*40*	***h***	*50*	*cm*
w	*15,7*	***d***	*15,7*	***h***	*19,7*	*inch*

Max Weight Carried 30 kg | 60 lbs

TORINO
COLLECTION

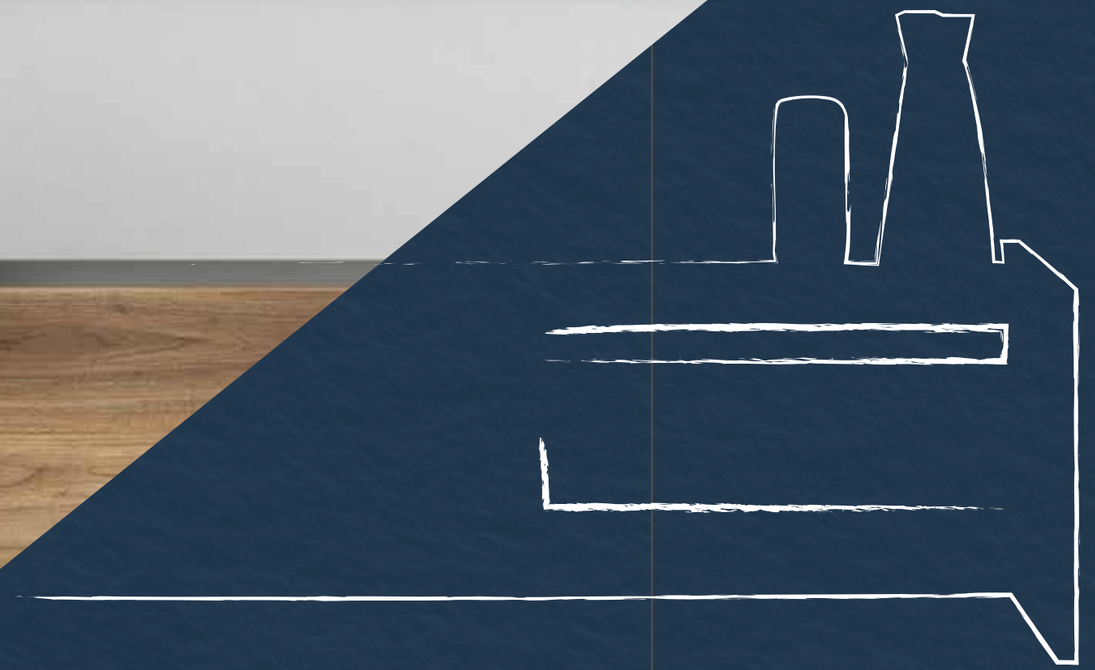

tv stand

TRN55TS01

Color | High gloss white + Sonomo

TRN55TS02

Color | Anthracite + Rahle

w	*140*	*d*	*35*	*h*	*35*	*cm*
w	*55*	*d*	*14*	*h*	*14*	*inch*

Max Weight Carried 60 kg | 132 lbs

bookcase

TRN48BC01

Color | High gloss white + Sonomo

TRN48BC02

Color | Anthracite + Rahle

w	*60*	*d*	*30*	*h*	*122*	*cm*
w	*24*	*d*	*12*	*h*	*48*	*inch*

Max Weight Carried 15 kg | 33 lbs

computer desk

TRN47CD01

Color | High gloss white + Sonomo

TRN47CD02

Color | Anthracite + Rahle

w	*120*	*d*	*60*	*h*	*75*	*cm*
w	*47*	*d*	*24*	*h*	*29*	*inch*

Max Weight Carried 50 kg | 132 lbs

VENEZIA

COLLECTION

tv stand

VNZ59TS01

Color | High gloss white + Sonomo

VNZ59TS02

Color | Black + Cura

w	*150*	*d*	*35*	*h*	*50*	*cm*
w	*59*	*d*	*13,8*	*h*	*19,7*	*inch*

Max Weight Carried 60 kg | 130 lbs

coffee table

VNZ39CT01

Color | High gloss white + Sonomo

VNZ39CT02

Color | Black + Cura

w	*100*	*d*	*60*	*h*	*40*	*cm*
w	*39,3*	*d*	*23,6*	*h*	*15,7*	*inch*

Max Weight Carried 40 kg | 90 lbs

side table

VNZ20ST01

Color | High gloss white + Sonomo

VNZ20ST02

Color | Black + Cura

w	*50*	*d*	*50*	*h*	*50*	*cm*	
w	*20*	*d*	*20*	*h*	*20*	*inch*	

Max Weight Carried 30 kg | 66 lbs

TV STANDS

tv stand

ANG59TS01

Color | High gloss white + Gold

w	*60*	*d*	*30*	*h*	*45*	*cm*
w	*60*	*d*	*30*	*h*	*45*	*inch*

Max Weight Carried 70 kg | 150 lbs

tv stand

ARE63TS01

Color | High gloss white

w	*160*	***d***	*32*	***h***	*37*	*cm*
w	*63*	***d***	*12,6*	***h***	*14,6*	*inch*

Max Weight Carried 90 kg | 200 lbs

tv stand

ATL71TS02

Color | Moonstone + Sepet

w	*150*	***d***	*30*	***h***	*40*	*cm*
w	*59*	***d***	*12*	***h***	*15,7*	*inch*

Max Weight Carried 80 kg | 180 lbs

tv stand

CAM63TS01

Color | High gloss white + Sonomo

w	*160*	***d***	*35*	***h***	*45*	*cm*
w	*63*	***d***	*13,8*	***h***	*17,7*	*inch*

Max Weight Carried 90 kg | 200 lbs

tv stand

CLG59TS01

Color | Cura

CLG59TS02

Color | Sonomo

w	*150*	*d*	*35*	*h*	*55*	*cm*
w	*59*	*d*	*13,8*	*h*	*21,6*	*inch*

Max Weight Carried 60 kg | 150 lbs

tv stand

COL63TS01

Color | Black + Walnut

COL63TS02

Color | High gloss white + Black

w	*160*	*d*	*35*	*h*	*52*	*cm*
w	*63*	*d*	*14,0*	*h*	*20,0*	*inch*

Max Weight Carried 90 kg | 200 lbs

tv stand

COR47TS01

Color | High gloss white

COR47TS02

Color | High gloss white + Marble pattern

COR47TS03

Color | Sonomo

w	*120*	*d*	*35*	*h*	*55*	*cm*	
w	*47*	*d*	*14*	*h*	*21,6*	*inch*	

Max Weight Carried 60 kg | 130 lbs

tv stand

DENT43TS01

Color | High gloss white

w	*110*	***d***	*35*	***h***	*70*	*cm*
w	*43,3*	***d***	*13,8*	***h***	*27,6*	*inch*

Max Weight Carried 70 kg | 154 lbs

tv stand

DRE58TS01

Color | High gloss white

DRE58TS02

Color | High gloss white + Alize

DRE58TS03

Color | High gloss white + Bendir

w	*150*	*d*	*35*	*h*	*47*	*cm*
w	*59*	*d*	*13,8*	*h*	*18,5*	*inch*

Max Weight Carried 90 kg | 200 lbs

floating tv stand

ELA63FTS01

Color | Black + Walnut

ELA63FTS02

Color | High gloss white

w	*160*	***d***	*30*	***h***	*30*	*cm*
w	*63*	***d***	*11,8*	***h***	*11,8*	*inch*

Max Weight Carried 50 kg | 110 lbs

tv stand

FIO71TS01

Color | High gloss white + Walnut

w	*180*	***d***	*35*	***h***	*50*	*cm*
w	*71*	***d***	*14*	***h***	*19,7*	*inch*

Max Weight Carried 90 kg | 200 lbs

tv stand

FRT59SB01

Color | High gloss white + Cura

w	*150*	*d*	*35*	*h*	*75*	*cm*
w	*59*	*d*	*13,8*	*h*	*29,5*	*inch*

Max Weight Carried 20 kg | 45 lbs

tv stand

GAR59TS01

Color | Rahle

w	*160*	*d*	*35*	*h*	*52*	*cm*
w	*63*	*d*	*14*	*h*	*20,4*	*inch*

Max Weight Carried 90 kg | 200 lbs

tv stand

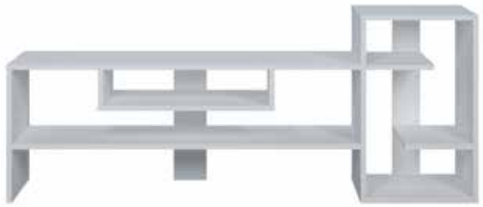

GUL63TS01

Color | High gloss white

w	*162*	*d*	*35*	*h*	*64*	*cm*
w	*63,8*	*d*	*14*	*h*	*25,2*	*inch*

Max Weight Carried 70 kg | 150 lbs

tv stand

KENT63TS01

Color | Anka

w	*160*	*d*	*35*	*h*	*62*	*cm*
w	*63*	*d*	*13,8*	*h*	*24,4*	*inch*

Max Weight Carried 80 kg | 176 lbs

tv stand

LAM63TS01

Color | Anthracite + Rahle

LAM63TS02

Color | High gloss white + Sonomo

w	*160*	*d*	*35*	*h*	*54*	*cm*
w	*63*	*d*	*13,8*	*h*	*22,3*	*inch*

Max Weight Carried 60 kg | 130 lbs

floating tv stand

LEO59FTS01

Color | Sonomo

LEO59FTS02

Color | High gloss white

w	*150*	*d*	*32*	*h*	*28*	*cm*
w	*60*	*d*	*12*	*h*	*11*	*inch*

Max Weight Carried 50 kg | 110 lbs

floating tv stand

LEO71FTS01

Color | Sonomo

LEO71FTS02

Color | High gloss white

w	*180*	*d*	*32*	*h*	*28*	*cm*
w	*71*	*d*	*12*	*h*	*11*	*inch*

Max Weight Carried 50 kg | 110 lbs

tv stand

LEP71TS01

Color | High gloss white + Alize

LEP71TS02

Color | High gloss white

LEP71TS03

Color | High gloss white + Marble pattern

w	*180*	*d*	*35*	*h*	*42*	*cm*
w	*70,8*	*d*	*14*	*h*	*16,5*	*inch*

Max Weight Carried 90 kg | 200 lbs

floating tv stand

LEO59FTS01

Color | Sonomo

LEO59FTS02

Color | High gloss white

LUC47FTS01

Color | High gloss white

w	*120*	***d***	*30*	***h***	*30*	*cm*
w	*47,2*	***d***	*11,8*	***h***	*11,8*	*inch*

Max Weight Carried 40 kg | 90 lbs

floating tv stand

LOT50FTS01

Color | High gloss white

LOT50FTS02

Color | Black

LOT50FTS03

Color | Black + Rahle

w	*128*	*d*	*22*	*h*	*34*	*cm*
w	*50,4*	*d*	*8,7*	*h*	*13,4*	*inch*

Max Weight Carried 15 kg | 33 lbs

tv stand

MAN59TS01

Color | High gloss white

MAN59TS02

Color | High gloss white + Sonomo

w	*150*	*d*	*40*	*h*	*47*	*cm*
w	*59,1*	*d*	*15,7*	*h*	*18,5*	*inch*

Max Weight Carried 80 kg | 175 lbs

tv stand

MRB71TS01

Color | High gloss white + Black

w	*180*	***d***	*35*	***h***	*45*	*cm*
w	*71*	***d***	*13,8*	***h***	*17,7*	*inch*

Max Weight Carried 70 kg | 150 lbs

tv stand

MAR59TS01

Color | High gloss white

w	*150*	***d***	*30*	***h***	*42*	*cm*
w	*59*	***d***	*11,8*	***h***	*16,5*	*inch*

Max Weight Carried 80 kg | 180 lbs

tv stand

MRL59TS01

Color | High gloss white + Sonomo

MRL59TS02

Color | Black + Sonomo

w	*150*	*d*	*35*	*h*	*54*	*cm*
w	*59*	*d*	*13,8*	*h*	*22,3*	*inch*

Max Weight Carried 60 kg | 130 lbs

tv stand

NTA53TS01 Color | High gloss white + Rahle

NTA53TS02 Color | Anthracite + Rahle

w	*135*	*d*	*35*	*h*	*48*	*cm*
w	*53*	*d*	*13,5*	*h*	*19*	*inch*

Max Weight Carried 80 kg | 180 lbs

floating tv stand

NUM59FTS01

Color | High gloss white

NUM59FTS02

Color | Black

w	*150*	*d*	*30*	*h*	*18*	*cm*
w	*59,1*	*d*	*11,8*	*h*	*7,1*	*inch*

Max Weight Carried 50 kg | 110 lbs

tv stand

PAR55TS01

Color | High gloss white

w	*140*	*d*	*38*	*h*	*43*	*cm*
w	*55,1*	*d*	*15*	*h*	*20,3*	*inch*

Max Weight Carried 70 kg | 155 lbs

tv stand

PAU63TS01

Color | Rahle + Black

PAU63TS02

Color | High gloss white

PAU63TS03

Color | High gloss white + Black

w	*160*	*d*	*35*	*h*	*50*	*cm*
w	*63*	*d*	*23,8*	*h*	*19,7*	*inch*

Max Weight Carried 90 kg | 200 lbs

tv stand

PER55TS01

Color | High gloss white

w	*220*	***d***	*30*	***h***	*43*	*cm*
w	*86,6*	***d***	*11,8*	***h***	*17*	*inch*

Max Weight Carried 60 kg | 130 lbs

tv stand

PIE63TS01

Color | Black + Walnut

PIE63TS02

Color | High gloss white + Marble pattern

w	*160*	*d*	*35*	*h*	*57*	*cm*
w	*63*	*d*	*13,8*	*h*	*22,4*	*inch*

Max Weight Carried 90 kg | 200 lbs

tv stand

PSA47TS01

Color | High gloss white

w	*120*	***d***	*30*	***h***	*43*	*cm*
w	*47*	***d***	*12*	***h***	*17*	*inch*

Max Weight Carried 40 kg | 90 lbs

tv stand

TER59TS01

Color | High gloss white

w	*150*	*d*	*35*	*h*	*64*	*cm*
w	*59*	*d*	*13,8*	*h*	*25,2*	*inch*

Max Weight Carried 70 kg | 150 lbs

tv stand

TER71TS01

Color | High gloss white

w	*180*	*d*	*35*	*h*	*63*	*cm*
w	*71*	*d*	*14*	*h*	*25*	*inch*

Max Weight Carried 90 kg | 200 lbs

tv stand

WAG47TS01 Color | High gloss white

WAG47TS02 Color | Anthracite + Alize

w	*120*	***d***	*35*	***h***	*40*	*cm*
w	*47,2*	***d***	*13,5*	***h***	*15,8*	*inch*

Max Weight Carried 60 kg | 120 lbs

BOOKCASES

ANGELI

bookcase

ANG36BC01

Color | High gloss white + Gold

w	*90*	*d*	*30*	*h*	*93*	*cm*
w	*35,4*	*d*	*11,8*	*h*	*36,6*	*inch*

Max Weight Carried 20 kg | 44 lbs

bookcase

FUR67CBC01

Color | High gloss white + Black

FUR67CBC02

Color | Sonomo + Black

w	*35*	*d*	*35*	*h*	*170*	*cm*
w	*13,8*	*d*	*13,8*	*h*	*67*	*inch*

Max Weight Carried 15 kg | 33 lbs

bookcase

LON39BC01

Color | High gloss white

LON39BC02

Color | High gloss white + Anthracite

w	*80*	*d*	*22*	*h*	*104*	*cm*
w	*31,5*	*d*	*8,7*	*h*	*40,8*	*inch*

Max Weight Carried 20 kg | 45 lbs

bookcase

MAG71BC01

Color | High gloss white + Black

MAG71BC02

Color | Black + Walnut

MAG71BC03

Color | Marble pattern + Gold

MAG71BC04

Color | High gloss white + Gold

w	*65*	*d*	*30*	*h*	*180*	*cm*
w	*25,6*	*d*	*11,8*	*h*	*70,8*	*inch*

Max Weight Carried 15 kg | 35 lbs

bookcase

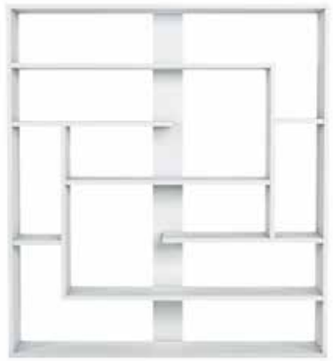

SEB51BC01

Color | High gloss white

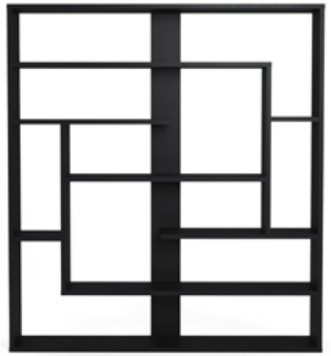

SEB51BC02

Color | Black

w	*120*	*d*	*22*	*h*	*132*	*cm*
w	*47,2*	*d*	*8,7*	*h*	*52*	*inch*

Max Weight Carried 20 kg | 45 lbs

WALL SHELVES

wall shelf

BLNWS01

Color | High gloss white

BLNWS02

Color | High gloss white + Sonomo

w	*74*	*d*	*22*	*h*	*75*	*cm*
w	*29,1*	*d*	*8,7*	*h*	*29,5*	*inch*

Max Weight Carried 15 kg | 33 lbs

wall shelf

BRIWS01

Color | High gloss white

BRIWS02

Color | High gloss white + Rahle

w	*39*	*d*	*22*	*h*	*45*	*cm*
w	*15,4*	*d*	*8,7*	*h*	*17,7*	*inch*

Max Weight Carried 15 kg | 33 lbs

wall shelf

CARWS01

Color | High gloss white

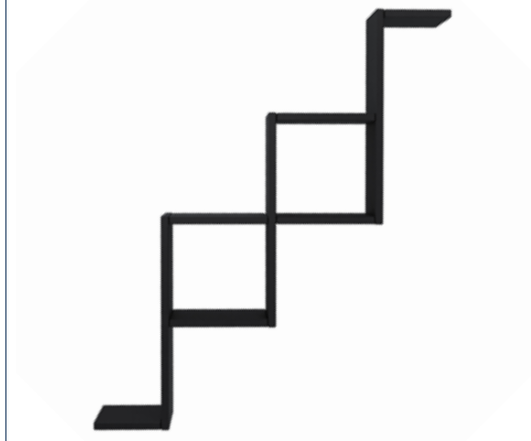

CARWS02

Color | Black

w	*80*	*d*	*22*	*h*	*95*	*cm*
w	*31,5*	*d*	*8,6*	*h*	*37,4*	*inch*

Max Weight Carried 15 kg | 33 lbs

wall shelf

DERWS01

Color | High gloss white

DERWS02

Color | High gloss white + Walnut

w	*105*	*d*	*22*	*h*	*40*	*cm*
w	*41*	*d*	*8,7*	*h*	*15,7*	*inch*

Max Weight Carried 10 kg | 22 lbs

wall shelf

DUOWS01
Color | High gloss white

DUOWS02
Color | Black

DUOWS03
Color | Alize

DUOWS04
Color | Cura

w	*55*	*d*	*27*	*h*	*72*	*cm*
w	*22*	*d*	*10,6*	*h*	*28,3*	*inch*

Max Weight Carried 15 kg | 33 lbs

wall shelf

MINIWS01

Color | High gloss white

MINIWS02

Color | Black

w	*20*	*d*	*15*	*h*	*9*	*cm*	
w	*7,9*	*d*	*5,9*	*h*	*3,5*	*inch*	

Max Weight Carried 5 kg | 10 lbs

OTTO

wall shelf

OTTWS01

Color | High gloss white

OTTWS02

Color | Black

w	*45*	*d*	*22*	*h*	*132*	*cm*
w	*17,7*	*d*	*8,7*	*h*	*52*	*inch*

Max Weight Carried 15 kg | 33 lbs

wall shelf

VALWS01

Color | High gloss white

VALWS02

Color | Sonomo

w	*75*	*d*	*22*	*h*	*78*	*cm*
w	*29,5*	*d*	*8,7*	*h*	*30,7*	*inch*

Max Weight Carried 15 kg | 33 lbs

COFEE TABLES

coffee table

CAM35CT01

Color | High gloss white + Sonomo

w	*90*	*d*	*60*	*h*	*41*	*cm*
w	*35,4*	*d*	*23,6*	*h*	*16,1*	*inch*

Max Weight Carried 50 kg | 110 lbs

coffee table

GENCT01

Color | Sonomo + Black

w	*70* *50 30*	*d*	*h*	*37* *35* *33*	*cm*
w	*27,6* *19,6* *11,8*	*d*	*h*	*14,6* *13,8* *13*	*inch*

Max Weight Carried 30 kg | 60 lbs

SIDE TABLES

side table

BM15ST01

Color | Moonstone

BM15ST02

Color | Moonstone + Rahle

w	*38*	*d*	*38*	*h*	*48*	*cm*
w	*20,0*	*d*	*15,0*	*h*	*15,0*	*inch*

Max Weight Carried 20 kg | 44 lbs

side table

CHA15STS01

Color | High gloss white + Rahle

CHA15STS02

Color | Anthracite + Rahle

w	*35 / 40*	***d***	*38 / 40*	***h***	*43 / 48*	*cm*
w	*14 / 15,5*	***d***	*15 / 15,5*	***h***	*17 / 19*	*inch*

Max Weight Carried 20 kg | 45 lbs

side table

CHR21STS01

Color | Moonstone + Rahle

CHR21STS02

Color | Anthracite + Rahle

w	*50 / 55*	***d***	*34 / 40*	***h***	*43 / 48*	*cm*	Max Weight Carried 20 kg | 45 lbs
w	*20 / 21,5*	***d***	*13 / 16*	***h***	*17 / 19*	*inch*	

side table

HER23ST01

Color | Moonstone

HER23ST02

Color | Sepet

HER23ST03

Color | Rahle

w	*35*	*d*	*35*	*h*	*58*	*cm*
w	*13,8*	*d*	*13,8*	*h*	*23*	*inch*

Max Weight Carried 20 kg | 44 lbs

side table

HP14ST01

Color | Moonstone

HP14ST02

Color | Moonstone + Rahle

						Color	
w	*35*	*d*	*35*	*h*	*48*	*cm*	
w	*13,8*	*d*	*13,8*	*h*	*19*	*inch*	

Max Weight Carried 30 kg | 66 lbs

side table

ROS23STS01

Color | High gloss white + Walnut

ROS23STS02

Color | Anthracite + Rahle

w	*44 / 60*	*d*	*38 / 40*	*h*	*43 / 46*	*cm*
w	*17,5 / 23*	*d*	*15 / 16*	*h*	*17 / 18*	*inch*

Max Weight Carried 20 kg | 45 lbs

c type table

LIMCTY01

Color | High gloss white + Sonomo

LIMCTY02

Color | Black + Rahle

w	*45*	*d*	*35*	*h*	*60*	*cm*
w	*17,7*	*d*	*13,8*	*h*	*23,6*	*inch*

Max Weight Carried 20 kg | 45 lbs

MULTI-PURPOSE CABINETS

multipurpose cabinet

ARZ35MPC01

Color | High gloss white

ARZ35MPC02

Color | High gloss white + Marble pattern

w	*90*	*d*	*35*	*h*	*70*	*cm*
w	*35,4*	*d*	*13,8*	*h*	*27,6*	*inch*

Max Weight Carried 20 kg | 45 lbs

multipurpose cabinet

CRD35MPC01

Color | High gloss white

CRD35MPC02

Color | High gloss white + Marble pattern

w	*90*	*d*	*35*	*h*	*70*	*cm*
w	*35,4*	*d*	*13,8*	*h*	*27,6*	*inch*

Max Weight Carried 20 kg | 45 lbs

multipurpose cabinet

FRT32MPC01

Color | High gloss white

w	*80*	*d*	*35*	*h*	*70*	*cm*
w	*31,5*	*d*	*13,8*	*h*	*29,5*	*inch*

Max Weight Carried 20 kg | 45 lbs

multipurpose cabinet

MNT35MPC01

Color | High gloss white

MNT35MPC02

Color | High gloss white + Marble pattern

w	*90*	*d*	*35*	*h*	*70*	*cm*
w	*35,4*	*d*	*11,8*	*h*	*27,6*	*inch*

Max Weight Carried 20 kg | 45 lbs

COMPUTER DESKS

computer desk

DES44CD01

Color | High gloss white + Alize

DES44CD02

Color | High gloss white

DES44CD03

Color | High gloss white + Marble pattern

w	*112*	*d*	*60*	*h*	*75*	*cm*
w	*44*	*d*	*23,6*	*h*	*29,9*	*inch*

Max Weight Carried 80 kg | 180 lbs

computer desk

TUR33CD01

Color | High gloss white

TUR33CD02

Color | Black

w	*89*	*d*	*45*	*h*	*27*	*cm*	
w	*35*	*d*	*17,7*	*h*	*10,6*	*inch*	

Max Weight Carried kg | lbs

SIDEBOARDS

console

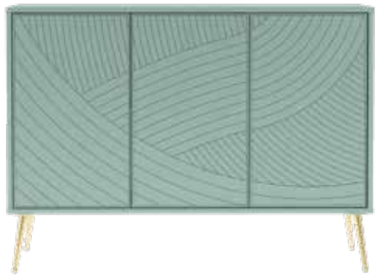

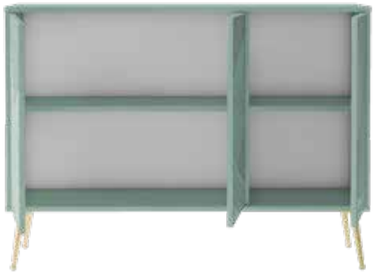

LUK47SB01

Color | Melisa

w	*120*	*d*	*38*	*h*	*88*	*cm*
w	*47,4*	*d*	*15*	*h*	*34,6*	*inch*

Max Weight Carried 60 kg | 130 lbs

console

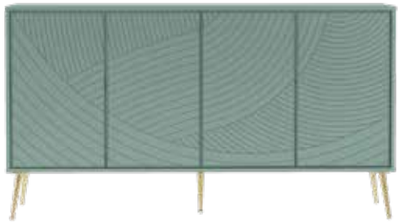

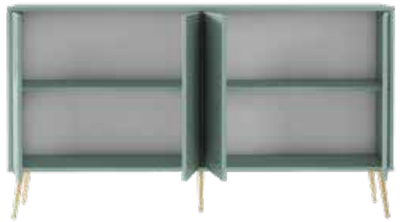

LUK63SB01

Color | Melisa

w	*160*	*d*	*38*	*h*	*88*	*cm*
w	*63*	*d*	*15*	*h*	*34,6*	*inch*

Max Weight Carried 80 kg | 180 lbs

NIGHT-STANDS

nightstand

MID20NS01

Color | Oak

w	*45*	*d*	*40*	*h*	*52*	*cm*
w	*17,7*	*d*	*9*	*h*	*15,7*	*inch*

Max Weight Carried 40 kg | 90 lbs

nightstand

ODI24NS01

Color | Pomza

ODI24NS02

Color | Sepet

ODI24NS03

Color | Sepet

w	*62*	*d*	*23*	*h*	*63*	*cm*
w	*24,4*	*d*	*9*	*h*	*24,8*	*inch*

Max Weight Carried 30 kg | 66 lbs

HANGER, COATRACK & SHOE CABINETS

hanger

JAV32HN01

Color | High gloss white

w	*80*	*d*	*11*	*h*	*23*	*cm*
w	*31,5*	*d*	*4,3*	*h*	*9*	*inch*

Max Weight Carried 15 kg | 33 lbs

hanger

SAH47HN01 Color

SAH47HN02 Color

w	*120*	*d*	*18*	*h*	*38*	*cm*
w	*47,3*	*d*	*7*	*h*	*15*	*inch*

Max Weight Carried 15 kg | 33 lbs

coatrack

LD24CR01

Color | High gloss white + Black

LD24CR02

Color | Black + Rahle

LD24CR03

Color | Sonomo + Black

w	*60 / 60*	*d*	*22 / 30*	*h*	*60 / 27*	*cm*	Max Weight Carried	20 kg	33 lbs
w	*23,5 / 23,5*	*d*	*8,5 / 12*	*h*	*23,5 / 10,5*	*inch*			

shoe cabinet

RHO29SC01

Color | White

RHO29SC02

Color | Anthracite

RHO29SC03

Color | White + Sepet

w	*75*	*d*	*27*	*h*	*107*	*cm*
w	*29,5*	*d*	*10,6*	*h*	*42*	*inch*

Max Weight Carried 15 kg | 33 lbs

BATH-ROOM VANITIES

bathroom vanity

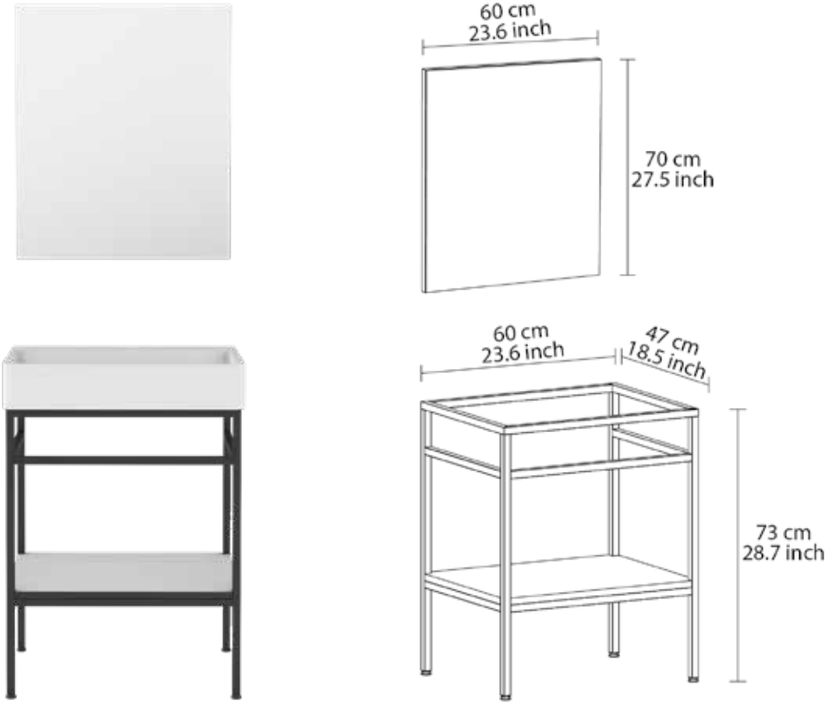

BTH-BLK23-01

bathroom vanity

BTH-KLL28-01

bathroom vanity

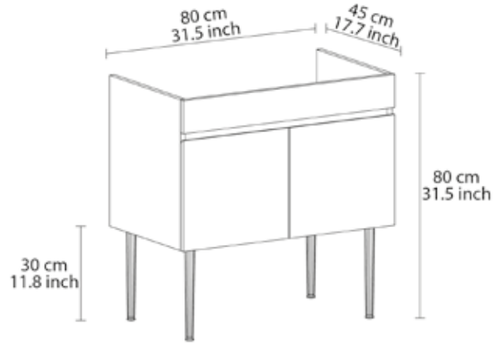

BTH-LGD32-01

bathroom vanity

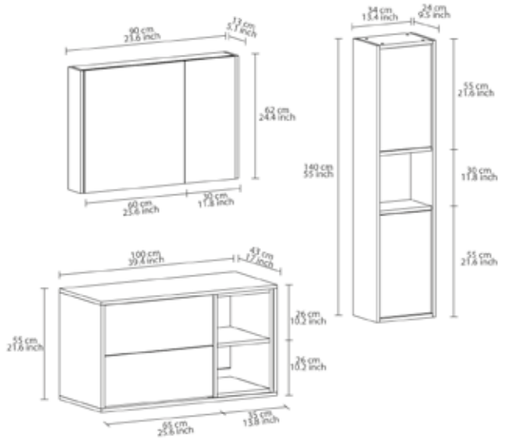

BTH-LUI40-01

bathroom vanity

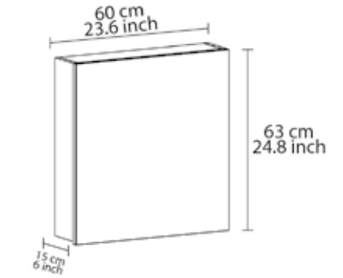

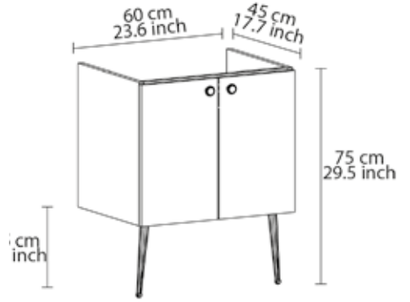

BTH-OMG23-01

bathroom vanity

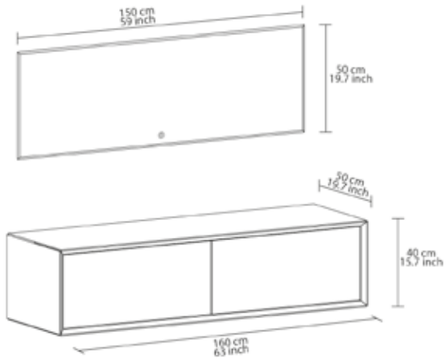

bathroom vanity

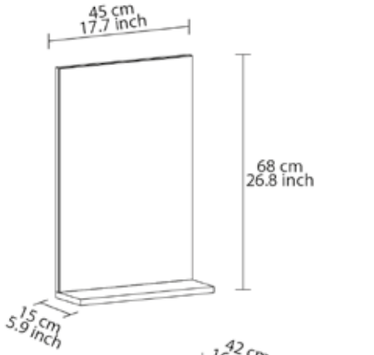

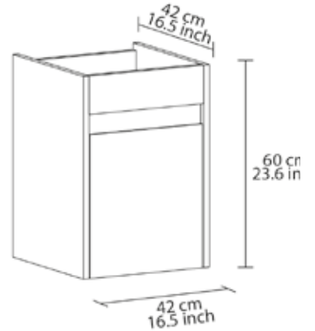

BTH-RTR17-01

bathroom vanity

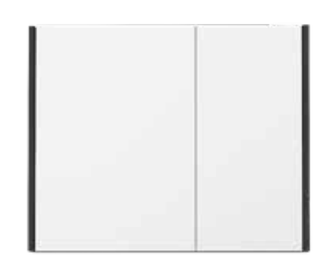

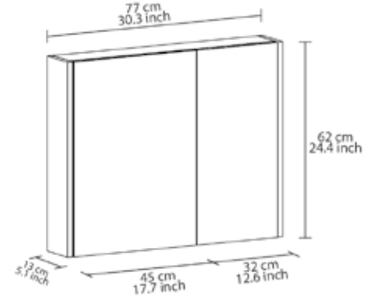

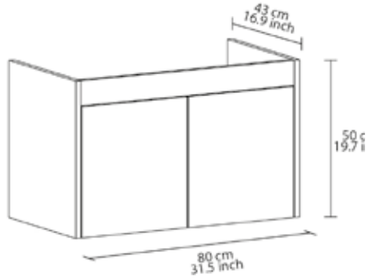

BTH-SOF32-01

bathroom vanity

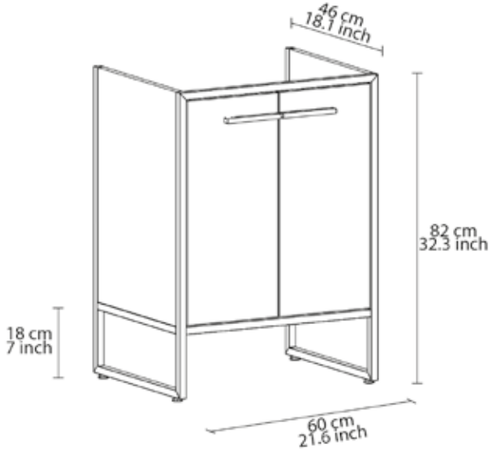

bathroom vanity

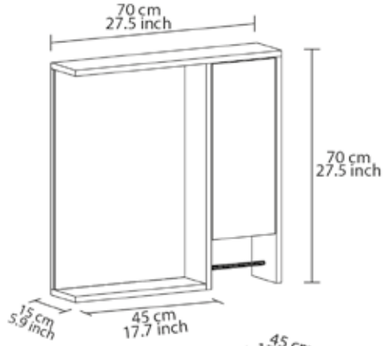

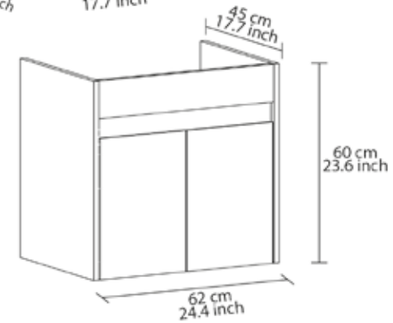

BTH-VIO25-01

bathroom vanity

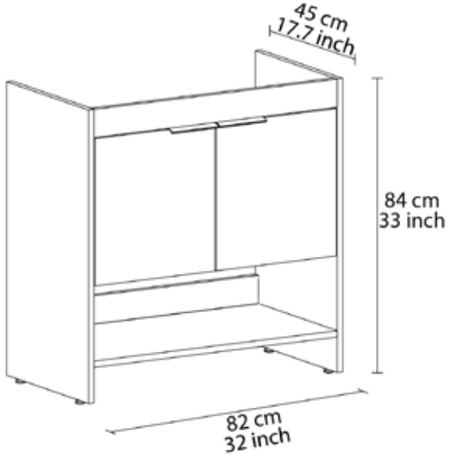

BTH-VOG32-01

bathroom vanity

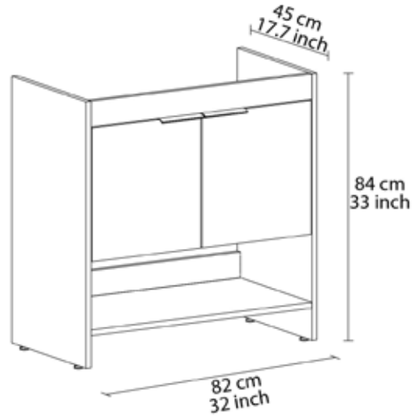

BTH-VOG32-02

MinimaDecor

Minimalist Home Furniture

by OCASSO

www.minimadecor.com
export@minimadecor.com